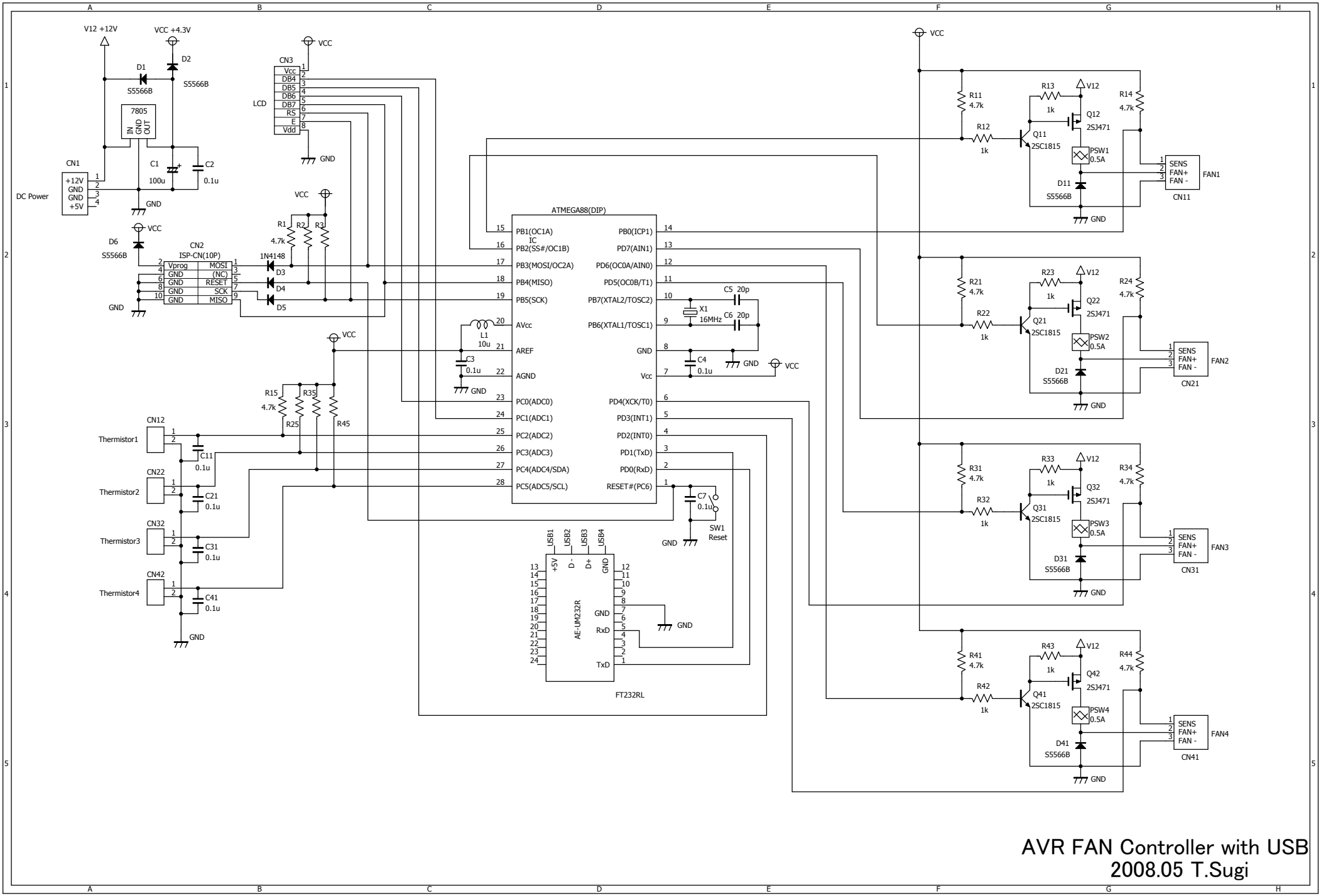

AVR FAN Controller with USB

2008.05 T.Sugi