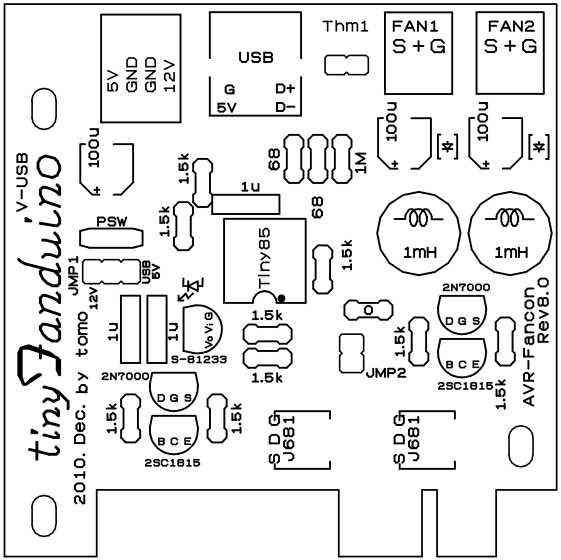

tinyFanduino
V-USB
2010. Dec. by tomo
5V
GND
GND
12V
USB
G
5V
D+
D-
Thm1
FAN1
S + G
FAN2
S + G
100u
100u
100u
68
1M
68
1.5k
1u
1.5k
PSW
JMP1
12V
USB
5V
Tiny85
1.5k
1mH
1mH
1u
1u
Vo Vi G
S-81233
1.5k
1.5k
2N7000
D G S
B C E
2SC1815
1.5k
1.5k
2N7000
D G S
B C E
2SC1815
1.5k
JMP2
1.5k
S D G
J681
S D G
J681
AVR-Fancon
Rev8.0