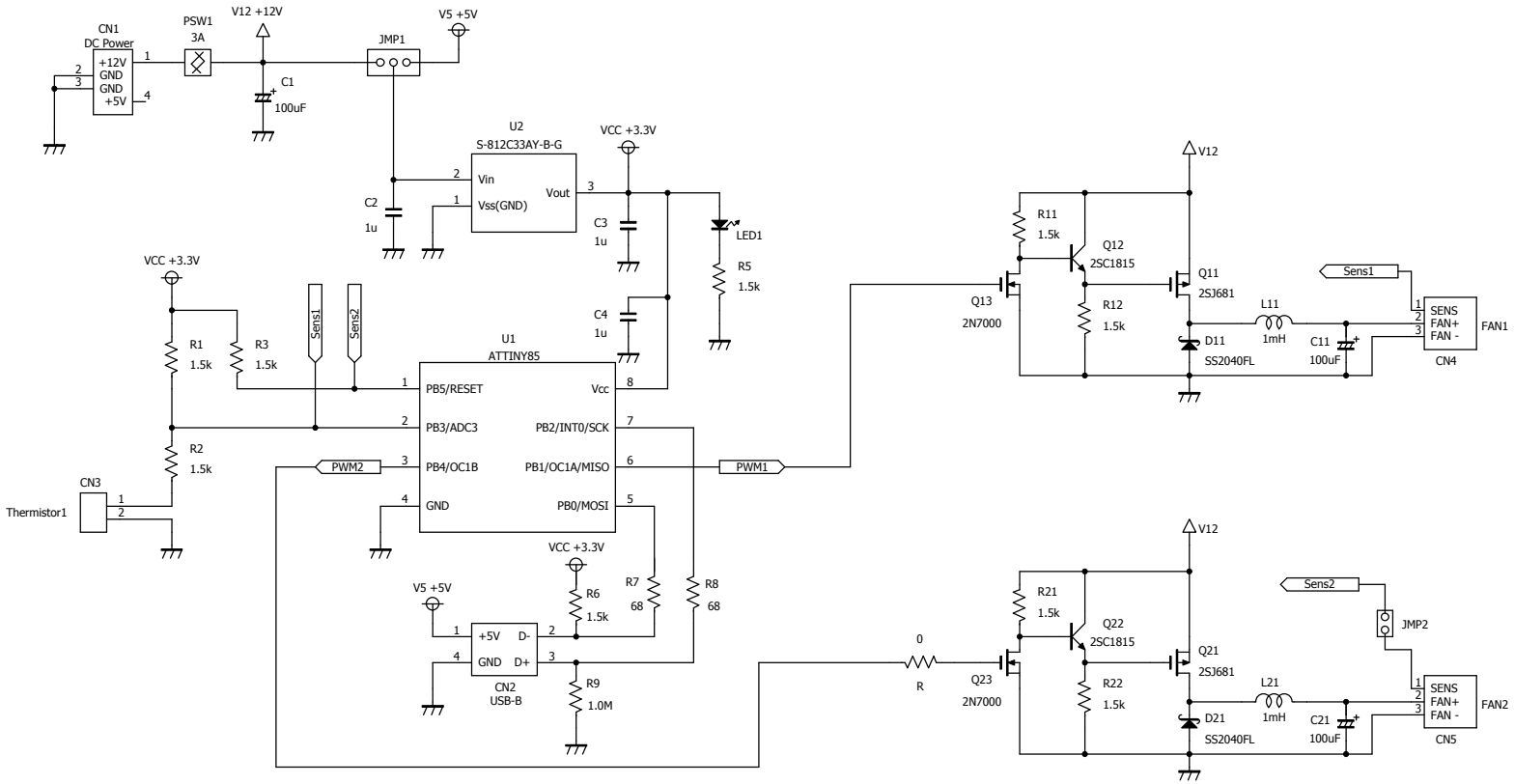

powerd by V-USB

tiny Fanduino

ParkAvenueBT

AVR-Fancon Rev8.0
Dec. 2010 by tomo